C&I Energy Station

FEATURES

- Easy to install and deploy with large space utilization;
- Unique modular design & flexible function configuration;
- With self-use, peak shifting, forced charging & discharging and other working modes;
- Strong scalability, simple & convenient expansion on both AC and DC sides;

EXPANSION

Expansion in DC side

Expansion in AC side

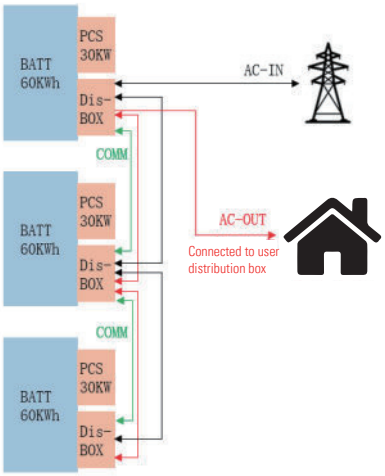

Topology(Max. power≤100kW)

SPECIFICATION

Module	3060	5060
Battery parameters		
Number of battery packs	12	12
Rated voltage	614.4V	
Voltage range	556.8~662.4V	
Rated energy	60kWh	
Max. continuous charging and discharging current	100A	
Communication	RS485/CAN	
Cycle life	6000times（25℃，0.5C，90%DOD，EOL70%）	
PV parameters		
Max.PV input power	39kW	65kW
Rated input voltage	600VDC	
Max.input voltage	1000VDC	
MPPT voltage range	200~850VDC	
PV input current	36+36+36（A）	36+36+36+36（A）
AC side parameters		
AC rated input/output power	30kVA	50kVA
AC Max. input/output power	33kVA	55kVA
AC rated input/output current	45.6A	75.8A
AC Max. input/output power	60A	83.3A
Voltage	3L/N/PE; 220/380V; 230/400V	
Frequency	50/60Hz	
THDi	≤3%	
Power Factor	0.8 leading to 0.8 lagging	
System parameters		
Dimension（W*H*D）	1200*2160*750mm	
Weight	860kg	880kg
Communication	CAN/RS485/WiFi/ETH	
Warranty	10years	
Expansion	Support in parallel up to 150kW/280kWh	
Protection grade	IP55	
Cooling	Air conditioner	
Environment temperature	-30~50℃	
Humidity	10%~95%RH	
Altitude	<2000m	
Certification	UN38.3，CE，IEC62619，CEI 0-21，VDE-AR-N 4105，IEC 62109	